TRIPOD TURNSTILE
BASTION

Bastion is one leg base tripod turnstile gate. Enlarged housing allows getting extra strength and robust benefits which are enough to keep pedestrian traffics of high intenstity.

ROBUST TRIPOD TURNSTILE WITH STYLISH DESIGN

60 pers/min	25 pers/min	570 mm	IP 41-54*			
FREE ACCESS	CROSSING CAPACITY	MAX. PASSAGE WIDTH	PROTECTIVE LEVEL	DROP-ARM	MOTORIZED	BI-DIRECTIONAL

Advantages

- Bi-directional motorized tripod turnstile with panic / bar drop function
- High quality at a cost effective price
- Integration with any type of access control and ID systems
- Low power consumption
- Panic / bar drop function with automatic reset
- Whisper quiet, low noise operation
- Optional indoor or outdoor housing types
- Wide range of accessories
- Availability of a back up battery connection
- Complete supply set as a standard

Standard

- 2 location LED indicators
- Wired remote control
- Supply of backup battery power connection
- Anti-panic function with automatic reset

Options

- Any additional devices upon request (e.g. passage counter, RFID/Proximity/BioMetric readers, coin acceptor, push button, barcode and QR-code reader)
- Heating function for external installation (for cold climates)
- Electronic module that provides automatic anti-panic function upon power failure
- Tripod Twin modification is available
- Dummy housings can be mounted adjacent to tripod turnstile

* first figure is standard, all other available upon request.

www.tiso.global
+380 (44) 291-21-11
e-mail: sales@tiso.global

Technical Specifications:

Unit width, mm	770
Unit length, mm	745
Unit height, mm	1000
Weight, kg (not more)	40
Mechanism	Motorized

Controlled by:

access control system;

manual control

When power goes OFF both directions are free.

Electrical Specifications:

- Voltage:
  - from the AC (100-240)V, 50/60Hz;
  - from a DC source 12 V;
- Maximum power consumption 55W per pass;

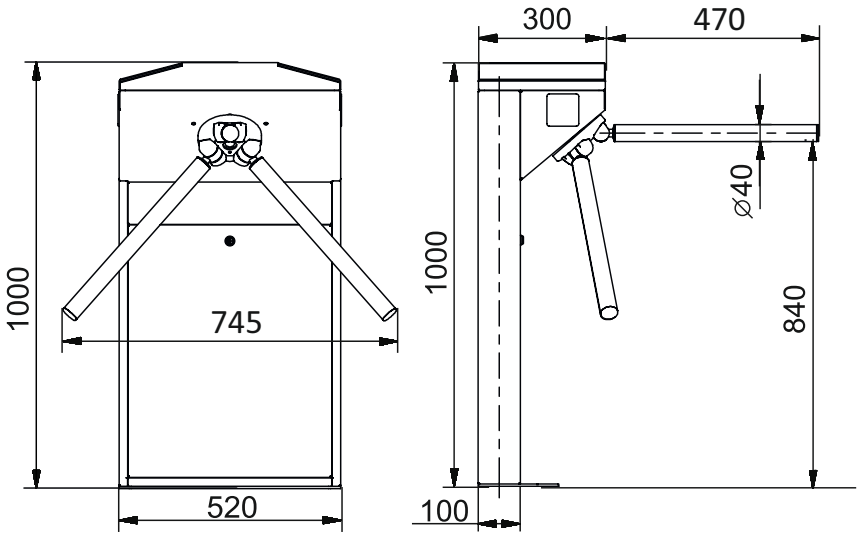

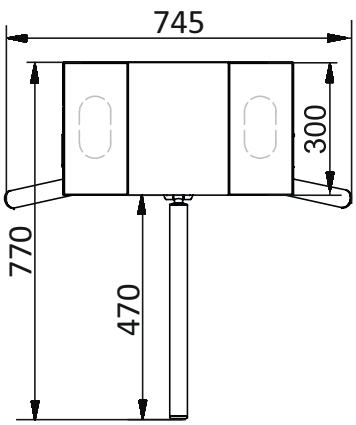

Materials

Standard housing	Brushed SS AISI 304
Available housing	Brushed SS AISI 316 Polished SS AISI 304 Polished SS AISI 316 Powder coated RAL
Tripod hub	Cast aluminum with painted grey finishing

Installation areas:

- Governmental Institutions
- Military Bases
- Nuclear Power Plants
- Production sites (Industrial Plants)
- Commercial areas
- Financial institutions
- Airport Premises
- Business (Office) Centers
- Hotels
- Sport Complexes
- Recreation areas
- Urban areas
- Education Institutions
- others

www.tiso.global
+380 (44) 291-21-11
e-mail: sales@tiso.global